Fall 2024 CSCI 113 - Lab 1; Noah Wiley

1.

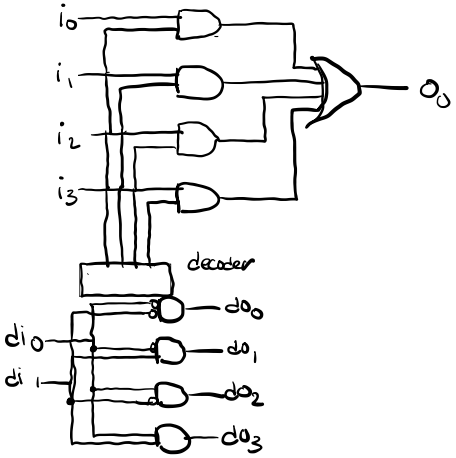

2. $F_1: (\bar{A}_0 A_1 A_2) + (A_0 \bar{A}_1 A_2) + (A_0 A_1 \bar{A}_2)$

$F_2: (\bar{A}_0 \bar{A}_1 A_2) + (A_0 \bar{A}_1 \bar{A}_2) + (\bar{A}_0 A_1 \bar{A}_2)$

F_3: binary $\boxed{>4}$ $(\bar{A}_0 A_1 A_2) + (\bar{A}_0 A_1 \bar{A}_2) + (\bar{A}_0 \bar{A}_1 A_2) + (\bar{A}_0 \bar{A}_1 \bar{A}_2)$

011
010
001
000

F_4: 111 $(A_0 A_1 A_2) + (A_0 \bar{A}_1 A_2) + (A_0 A_2 \bar{A}_3) + (A_0 \bar{A}_1 \bar{A}_2)$

101
110
100

3. $Z = ((A \cdot B) + (A \cdot C) + (B \cdot C)) \cdot (\overline{A \cdot B \cdot C})$

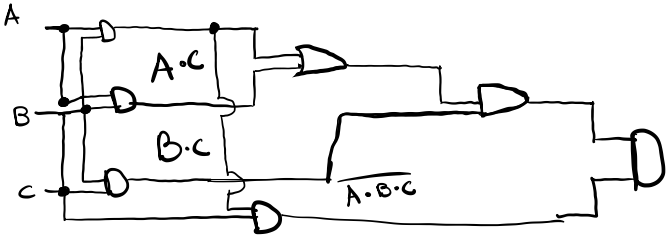

$Z = (A \cdot B \cdot \bar{C}) + (A \cdot \bar{B} \cdot C) + (\bar{A} \cdot B \cdot C)$

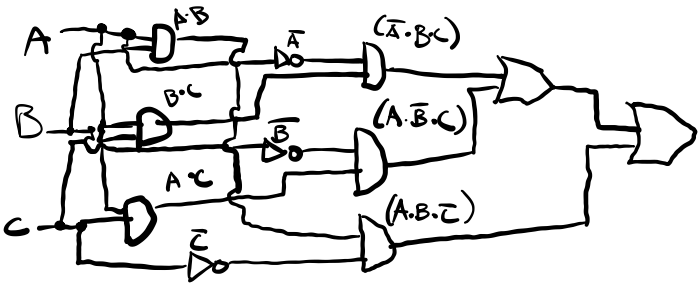

The first equation is slightly more efficient because if we didn't count the negator having 7 2-input gates while the 2nd equation used 8 gates.

4. $Z = ((A \cdot B)) + (A \cdot C) + (B \cdot C)) \cdot (\overline{A \cdot B \cdot C})$

$((A \cdot B) + (A \cdot C) + (B \cdot C)) \cdot (\bar{A} + \bar{B} + \bar{C})$

$(\cancel{A} \cdot B \cdot \cancel{\bar{A}}) + (\cancel{\bar{A}} \cdot \cancel{A} \cdot C) + (\bar{A} \cdot B \cdot C) + (\cancel{\bar{B}} \cdot A \cdot \cancel{B}) + (\bar{B} \cdot A \cdot C) + (\cancel{\bar{B}} \cdot \cancel{B} \cdot C)$
$+ (\bar{C} \cdot A \cdot B) + (\cancel{\bar{C}} \cdot A \cdot \cancel{C}) + (\cancel{\bar{C}} \cdot B \cdot \cancel{C})$

$\rightarrow B + C\,(\bar{A} \cdot B \cdot C) + A + C + (A \cdot \bar{B} \cdot C) + A + B + (A \cdot B \cdot \bar{C})$

$\rightarrow (\bar{A} \cdot B \cdot C) + (A \cdot \bar{B} \cdot C) + (A \cdot B \cdot \bar{C})$

it's now equivalent to 2nd equation

5.

$XOR = (A \cdot \bar{B}) + (\bar{A} \cdot B)$

$XOR = (A + B) \cdot (\overline{A \cdot B})$

$(A + B) \cdot (\overline{A \cdot B})$

$(A + B) \cdot (\bar{A} + \bar{B})$

$(\cancel{A \cdot \bar{A}}) + A \cdot \bar{B} + (B \cdot \bar{A}) + (\cancel{B \cdot \bar{B}})$

$(A \cdot \bar{B}) + (B \cdot \bar{A})$ equivalent ✓

6. Truth Table

XOR	A	B	C	results
	0	0	0	0
	1	0	0	1
	0	1	0	1
	0	0	1	1
	1	1	0	0
	0	1	1	0
	1	0	1	0
	1	1	1	1

$$A \oplus B \oplus C =$$
$$(A \cdot \bar{B} \cdot \bar{C}) + (\bar{A} \cdot B \cdot \bar{C}) + (\bar{A} \cdot \bar{B} \cdot C) + (A \cdot B \cdot C)$$
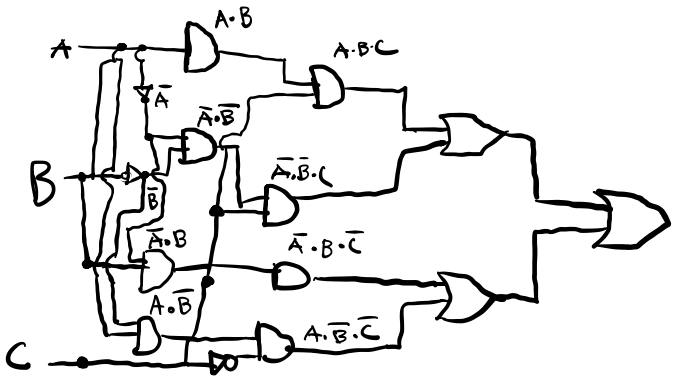
Diagram: